GE Rod end
LHS16-IKO - LHS16-IKO

https://www.123bearing.com/bearing-housing/rod-end/ge/lhs16-iko

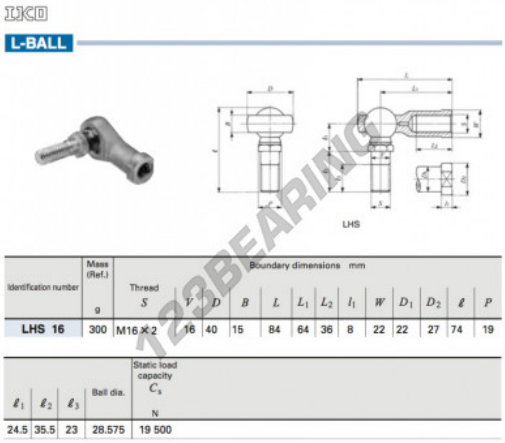

IKO

L-BALL

LHS

Identification number	Mass (Ref.) g	Thread S	Boundary dimensions mm V	D	B	L	L_1	L_2	l_1	W	D_1	D_2	ℓ	P
LHS 16	300	M16 × 2	16	40	15	84	64	36	8	22	22	27	74	19

ℓ_1	ℓ_2	ℓ_3	Ball dia.	Static load capacity C_s N
24.5	35.5	23	28.575	19 500

PRODUCT FEATURES

Brand	IKO
N° Ean13	3616060465122
Inside diameter	16 mm
Inside diameter	0.63" inch
Type	GE
Weight	300 g
Lubrication	without
Packaging	1

contact@123bearing.com
(646) 712 9672
CRT4 de Lesquin 60 Rue Du Haut De Sainghin 59273 Fretin FRANCE